## HD-RTI

converter the input signal that accept from RED sensor into isolated DC signal and display the present value to various forms.

## GENERAL SPECIFICATION

| | |
|---|---|
| Construction | : Plug-In |
| Wiring | : M3.5 Screw Terminals |
| Housing | : Plastic(Black) |
| Isolation | : Power to Input to Output 1 to Output 2 |
| Front Adjustment | : Zero and Span ±15% |

## DISPLAY

| | |
|---|---|
| Accuracy | : ±0.1digit |
| Display | : FND 7Segment 3½digit |
| Range | : Temperature |

## INPUT

| | |
|---|---|
| Input | : 3 wire RTD |
| Sensing Current | : 1mA |

RTD Temp' resistance Comparison Table.

| RTD / Temp | Jpt100Ω (JIS'89) | Pt100Ω (DIN,IEC751) |
|---|---|---|
| 0℃ | 100.00Ω | 100.00Ω |
| 100℃ | 139.16Ω | 138.50Ω |

## OUTPUT

DC VOLTAGE : ±12V Max

Load Resistance : Output drive 1mA Max. AT≥0.5V

| output | Load Resistance |
|---|---|
| 0 ~ 10mV | 10Ω Min |
| 0 ~ 100mV | 100Ω Min |
| 0 ~ 1V | 1KΩ Min |
| 0 ~ 5V | 5KΩ Min |
| 0 ~ 10V | 10KΩ Min |
| -10 ~ 10V | 10KΩ Min |
| 1 ~ 5V | 5KΩ Min |

DC CURRENT : 0 ~ 20mA

Load Resistance : Output drive 15V Max

| output | Load Resistance |
|---|---|
| 0 ~ 1mA | 15KΩ Max |
| 0 ~ 10mA | 1.5KΩ Max |
| 0 ~ 20mA | 750Ω Max |
| 1 ~ 5mA | 3KΩ Max |
| 4 ~ 20mA | 750Ω Max |

## INSTALLATION

| | |
|---|---|
| Operating Temperature | : -10 ~65℃ |
| Operating Humidity | : 90% RH Max(non-condensing) |
| Mounting | : Wall or DIN rail |
| Power Unit | |

- AC : Rating ±10%, approx. 3VA
- DC : Rating ±10%(ripple 10% p-p Max), approx.2w

## PERFORMANCE

| | |
|---|---|
| Accuracy | : ±0.1% F.S |
| Temp. coefficient | : ±0.015%/℃ |
| Response time | : ≤0.4sec(0 ~ 90%) |
| Insulation resistance | : ≥100MΩ with 500VDC |
| Dielectric strength | : 2000VAC @ 1minute (Input to Output to Power to Ground) |
| Burn out response | : ≤10sec |
| Burn out protection | : Up scale standard (Down scale or no burn out option) |

## ORDERING CODE SELECTION

MODEL : HD-RTI □□□□□□

PIN CONNECTION
A : 8 PIN B : 11 PIN

INPUT
1 : Jpt 100Ω(JIS'89)
2 : Pt 100Ω(DIN.IEC 751)
3 : Other Spec

OUTPUT 1

| VOLTAGE | CURRENT |
|---|---|
| 1: 0 ~ 10mV DC | A: 0 ~ 1mA DC |
| 2: 0 ~ 100mV DC | B: 0 ~ 10mA DC |
| 3: 0 ~ 1V DC | C: 0 ~ 20mA DC |
| 4: 0 ~ 5V DC | D: 1 ~ 5mA DC |
| 5: 0 ~ 10V DC | E: 4 ~ 20mA DC |
| 6: -10 ~ 10V DC | S: Other Current |
| 7: 1 ~ 5V DC | |
| 0: Other Voltage | |

OUTPUT 2
S : Same Range availability as OUTPUT 1
N : None

POWER
X : AC110V/60Hz, AC220V/60Hz
AC110V/220V S/W is located in the back plane
Z : DC 24V S : Other Power

DISPLAY
1 : Percent(%) 2 : Input Signal
3 : Output Signal 4 : Other Range

## CONNECTION DIAGRAM

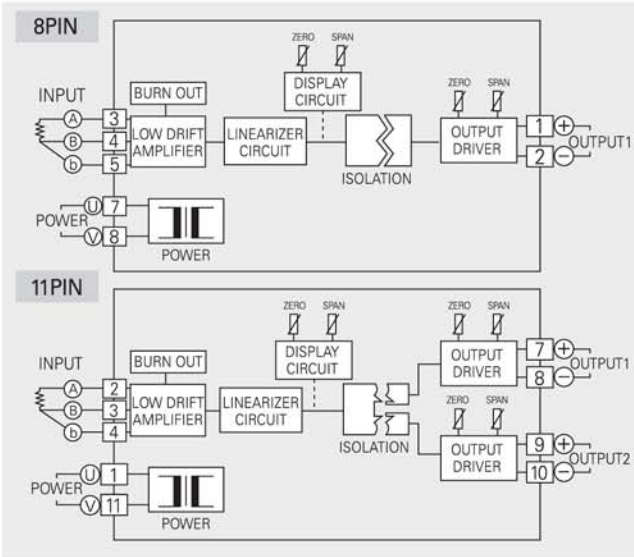



※주의※ 제품의 성능 향상을 위하여 제품내용및사양은 통보없이 변경될 수 있습니다.